Starting Systems

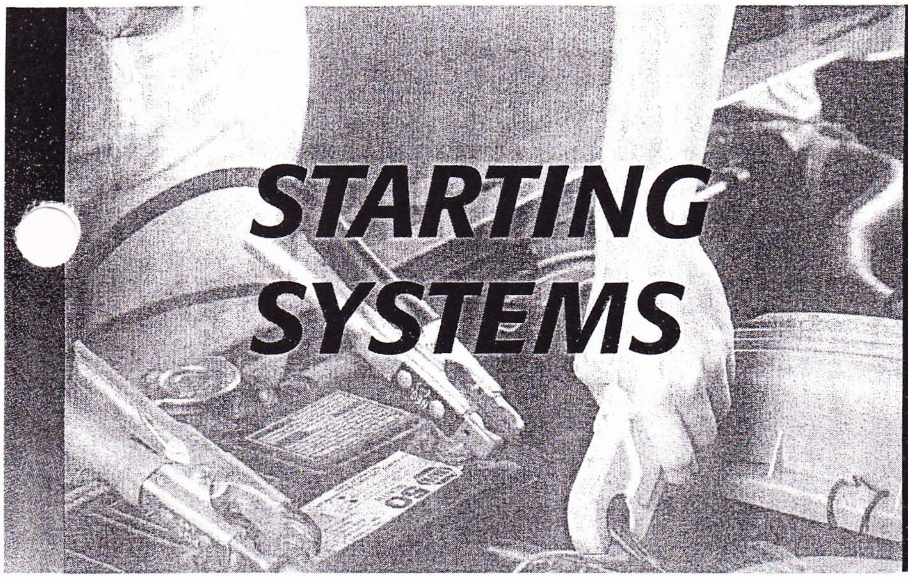

STARTING SYSTEMS

17

OBJECTIVES

◆ Explain the purpose of the starting system. ◆ List the components of the starting system, starter circuit, and control circuit. ◆ Explain the different types of magnetic switches and starter drive mechanisms. ◆ Explain how a starter motor operates. ◆ Describe the operation of the different types of starter motors. ◆ Perform basic tests to determine the problem areas in a starting system. ◆ Perform and accurately interpret the results of a current draw test. ◆ Disassemble, clean, inspect, repair, and reassemble a starter motor.

The vehicle's starting system is designed to turn or crank the engine over until it can operate under its own power. To do this, the starter motor receives electrical power from the battery. The starter motor then converts this energy into mechanical energy, which it transmits through the drive mechanism to the engine's flywheel.

The only function of the starting system is to crank the engine fast enough to run. The vehicle's ignition and fuel systems provide the spark and fuel for engine operation, but they are not considered components of the basic starting system.

STARTING SYSTEM—DESIGN AND COMPONENTS

A typical starting system has six basic components and two distinct electrical circuits. The components are the battery, ignition switch, battery cables, magnetic switch (either an electrical relay or a solenoid), starter motor, and the starter safety switch.

The starter motor draws a great deal of current from the battery. A large starter motor might require 250 or more amperes of current. This current flows through the large cables that connect the battery to the starter and ground.

The driver controls the flow of this current using the ignition switch normally mounted on the steering column. The battery cables are not connected to the switch, rather the system has two separate circuits: the starter circuit and the control circuit. The starter circuit, indicated by the solid lines in Figure 17–1, carries the heavy current from the battery to the starter motor through a magnetic switch in a relay or solenoid. The control circuit, shown by the dashed lines in Figure 17–1, connects battery power at the ignition switch to the magnetic switch, which controls the high current to the starter motor.

Starter Circuit

The starter circuit carries the high current flow within the system and supplies power for the actual engine cranking. Components of the starter circuit are the battery, battery cables, magnetic switch or solenoid, and the starter motor.

Battery and Cables Many problems associated with the starting system can be solved by troubleshooting the battery and its related components.

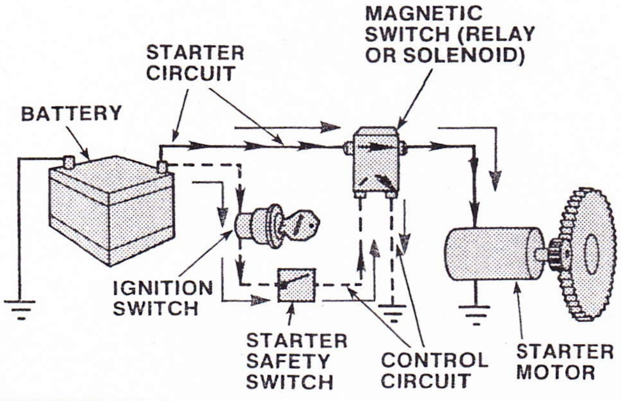

FIGURE 17–1 Major components and circuits of a typical starting system. The starter circuit is shown in a solid line. The control circuit is indicated by a dashed line.

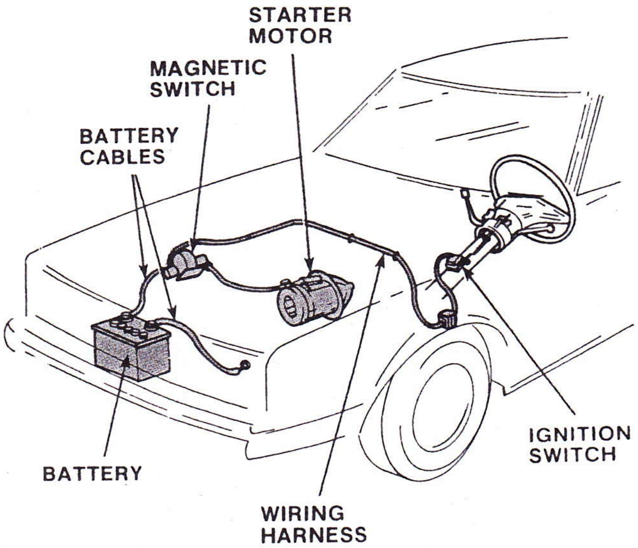

FIGURE 17–2 Basic battery cable and wiring connections in a typical starting system.

The starting circuit requires two or more heavy-gauge cables (Figure 17–2). Two of these cables attach directly to the battery. One of these cables connects between the battery's negative terminal and an excellent ground. The other cable connects the battery's positive terminal with the solenoid. On vehicles equipped with a **starter relay**, two positive cables are needed. One runs from the positive battery terminal to the relay and the second from the relay to the starter motor terminal. In any case, these cables carry the required heavy current from the battery to the starter and from the starter back to the battery.

All cables must be in good condition. Corrosion at the cable terminals acts as a resistor and causes a voltage drop. Cable terminals become corroded from battery acid fumes and the oxidation of the metals at the connectors. The cable itself may become corroded and weakened if the cable has contact with engine parts and other metal surfaces that can fray the insulation of the cable. Frayed insulation can also cause a dead short that can seriously damage some of the electrical units of the vehicle. A short to ground is the cause of many dead batteries and can result in fire.

Cables must also be heavy enough to comfortably carry the required current load. Cranking problems can be created when undersized cables are installed. Some replacement cables use smaller-gauge wire encased in thick insulation, so the small gauge cables can look as heavy as the original equipment. In warm weather, with good connections and no extra current drawn from lights or accessories, an engine can start well with smaller cables. But many starts must be done under conditions that are less than ideal. With undersized cables, the starter motor does not develop its greatest turning effort and even a fully charged battery might be unable to start the engine. Always check cable size during the general inspection of the system.

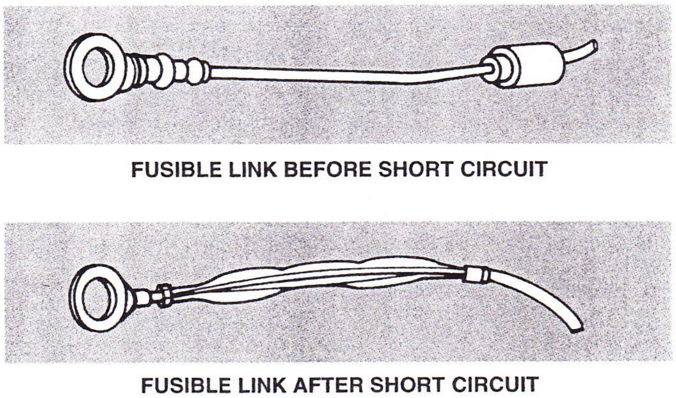

FIGURE 17–3 Example of a good and a burnt fusible link.

When checking cables and wiring, always check any fusible links in the wiring. Many vehicles are equipped with fusible links to protect the wiring from overloading. These links are different in construction than a fuse, but they operate in much the same way (Figure 17–3). The most common type is made of a wire with a special nonflammable insulation. The wire used to make fusible links is typically two gauge sizes smaller than the wire used in the circuits they are designed to protect. Often, when a fusible link is subjected to excessive current, the insulation will become charred and give the appearance of a failed link. This is not always a true indication. The best way to check a fusible link is to disconnect the battery cables and connect an ohmmeter across the link to check for continuity.

The largest fusible link is usually located at the starter solenoid battery terminal. From this terminal, current is distributed to all parts of the vehicle. Another large fusible link joins this battery terminal to the main body harness and protects the complete wiring of the vehicle. It may be located in its own special holder or be attached directly to the starter relay terminal. When a link has failed, always troubleshoot the system and locate the cause before replacing the link. Many late-model vehicles are equipped with maxi-fuses in place of the fusible links. These should be checked during any routine starting system inspection.

Magnetic Switches Every starting system contains some type of magnetic switch that enables the control circuit to open and close the starter circuit. This magnetic switch can be one of several designs.

SOLENOID The solenoid-actuated starter is by far the most common starter system used. A **solenoid** is an electromechanical device that uses the movement

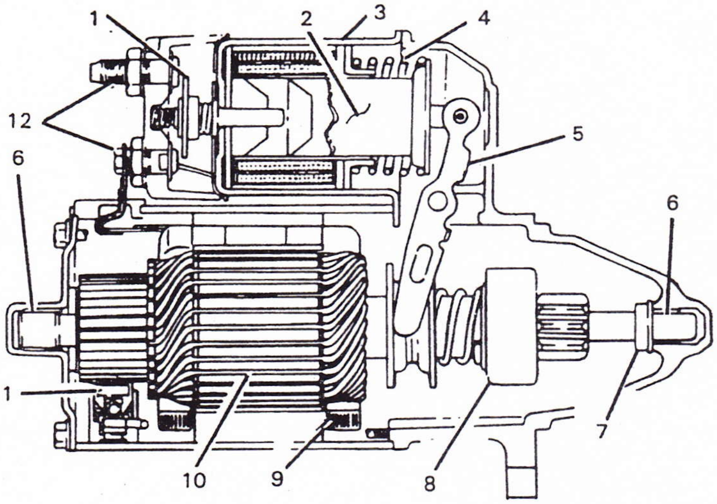

1 CONTACT, STARTER SOLENOID SWITCH
2 PLUNGER, STARTER SOLENOID SWITCH
3 SWITCH, STARTER SOLENOID
4 SPRING, STARTER SOLENOID SWITCH PLUNGER
5 LEVER, STARTER SHIFT
6 BUSHING, STARTER DRIVE
7 COLLAR, STARTER DRIVE STOP
8 DRIVE, STARTER
9 COIL, STARTER FIELD
10 ARMATURE, STARTER
11 BRUSH, STARTER
12 TERMINAL, STARTER SOLENOID

FIGURE 17–4 Example of a solenoid-actuated starter in which the solenoid mounts directly to the starter motor.

of a plunger to exert a pulling or holding force. As shown in the starter in Figure 17–4, the solenoid mounts directly on top of the starter motor.

In this type of starting system, the solenoid uses the electromagnetic field generated by its coil to perform two distinct jobs.

The first is to push the drive pinion of the starter motor into mesh with the engine's flywheel. This is the solenoid's mechanical function. The second job is to act as an electrical relay switch to energize the motor once the drive pinion is engaged. Once the contact points of the solenoid are closed, full battery current flows to the starter motor.

The solenoid assembly has two separate windings: a **pull-in winding** and a **hold-in winding**. The two windings have approximately the same number of turns but are wound from different size wire. Together these windings produce the electromagnetic force needed to pull the plunger into the solenoid coil. The heavier pull-in windings draw the plunger into the solenoid, while the lighter gauge windings produce enough magnetic force to hold the plunger in this position.

Both windings are energized when the ignition switch is turned to the start position. When the plunger disc makes contact with this solenoid terminal, the pull-in winding is deactivated. At the same time, the plunger contact disc makes the motor feed connection between the battery and the starting motor, directing full battery current to the field coils and starter motor armature for cranking power (Figure 17–5).

As the solenoid plunger moves, the shift fork also pivots on the pivot pin and pushes the starter drive pinion into mesh with the flywheel ring gear. When the starter motor receives current, its armature starts to turn. This motion is transferred through an overrunning clutch and pinion gear to the engine flywheel and the engine is cranked.

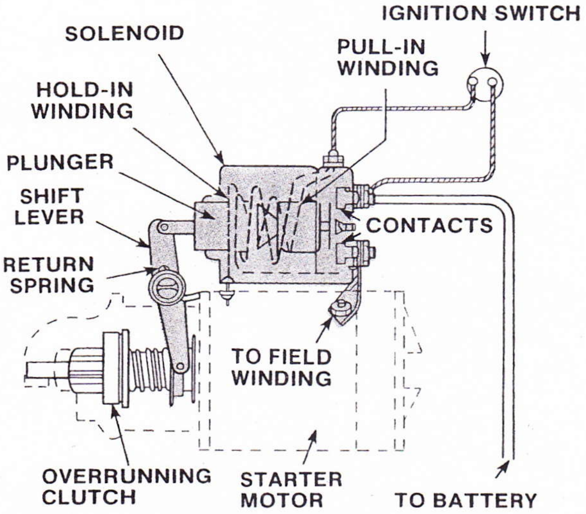

FIGURE 17–5 Solenoids operate using a heavy-gauge pull-in winding, and a light-gauge hold-in winding. The heavy-gauge pull-in winding generates a strong magnetic field to move the plunger. A light-gauge hold-in winding generates a weaker magnetic field to hold the plunger in position after it has moved and completed the starter circuit.

With this type of solenoid-actuated direct drive starting system, teeth on the **pinion gear** may not immediately mesh with the flywheel ring gear. If this occurs, a spring located behind the pinion compresses so the solenoid plunger can complete its stroke. When the starter motor armature begins to turn, the pinion teeth quickly line up with the flywheel teeth and the spring pressure forces them to mesh.

STARTER RELAY Relays are the second major type of magnetic switch used. All **positive engagement starters** (described later in this chapter) use a relay in

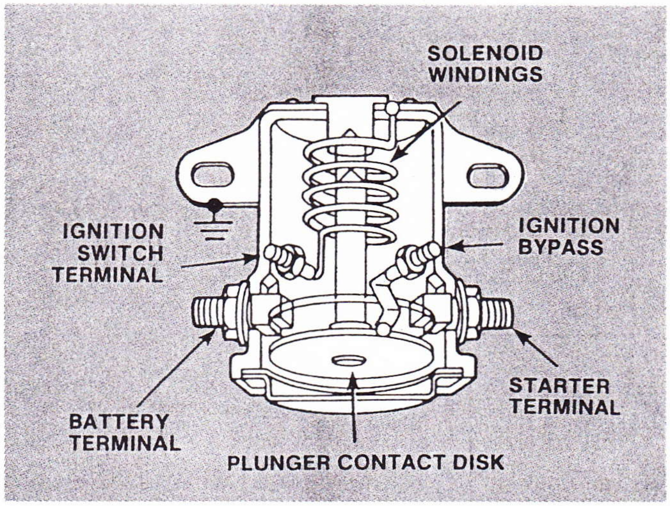

FIGURE 17–6 Cross-sectional view of a starter relay, which is actually a solenoid that is used to close an electrical circuit.

series with the battery cables to deliver the high current necessary through the shortest possible battery cables. Figure 17–6 shows a typical starter relay. It is very similar to the solenoid. However, it is not used to move the drive pinion into mesh. It is strictly an electrical relay or switch. When current from the ignition switch arrives at the ignition switch terminal of the relay, a strong magnetic field is generated in the coil of the relay. This magnetic force pulls the plunger contact disc up against the battery terminal and the starter terminal of the relay, allowing full current flow to the starter motor.

A secondary function of the starter relay is to provide an alternate electrical path to the ignition coil during cranking. This current flow bypasses the resistance wire (or ballast resistor) in the ignition primary circuit. This is done when the plunger disc contacts the ignition by-pass terminal on the relay. Not all systems have an ignition by-pass setup.

Some vehicles use both a starter relay and a starter motor mounted solenoid. The relay controls current flow to the solenoid, which in turn controls current flow to the starter motor. This reduces the amount of current flowing through the ignition switch. In other words, it takes less current to activate the relay than to activate the solenoid.

Basically, all the different starting systems in use today fit into one of three categories: the solenoid shift, solenoid shift with relay, or positive engagement with relay. Typical wiring diagrams for each type of system are shown in Figures 17-7 and 17-8.

Starter Motor The starting motor (Figure 17–4) converts the electrical energy from the battery into mechanical energy for cranking the engine. The starter is a special type of electric motor designed to operate under great electrical overloads and to produce very high horsepower.

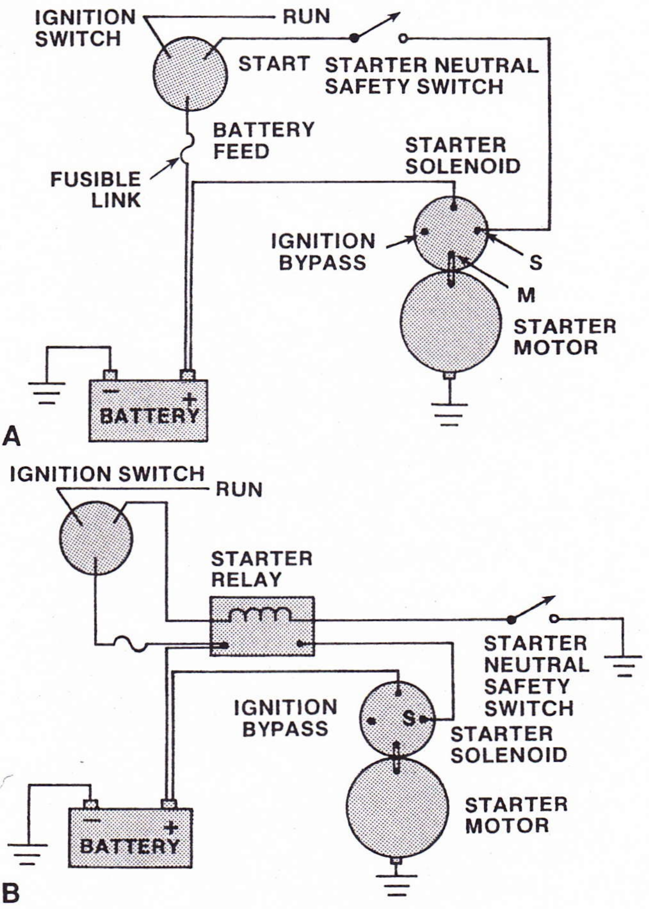

FIGURE 17–7 (A) Solenoid shift and (B) solenoid shift with starter relay starting systems.

Because of these design features, the starter can only operate for short periods of time without rest. The high current needed to operate the starter creates considerable heat, and continuous operation for any length of time causes serious heat damage to the unit. The starter must never operate for more than 30 seconds at a time and should rest for 2 minutes between these extended crankings. This permits the heat to dissipate without damage to the unit.

All starting motors are generally the same in design and operation. Basically, the starter motor consists of a housing, field coils, an armature, a commutator and brushes, and end frames. The main difference between designs is in the drive mechanism used to engage the flywheel.

The **starter housing** or **starter frame** encloses the internal starter components and protects them from damage, moisture, and foreign materials. The housing supports the field coils and forms a path for the magnetism produced by the current passing through the coils.

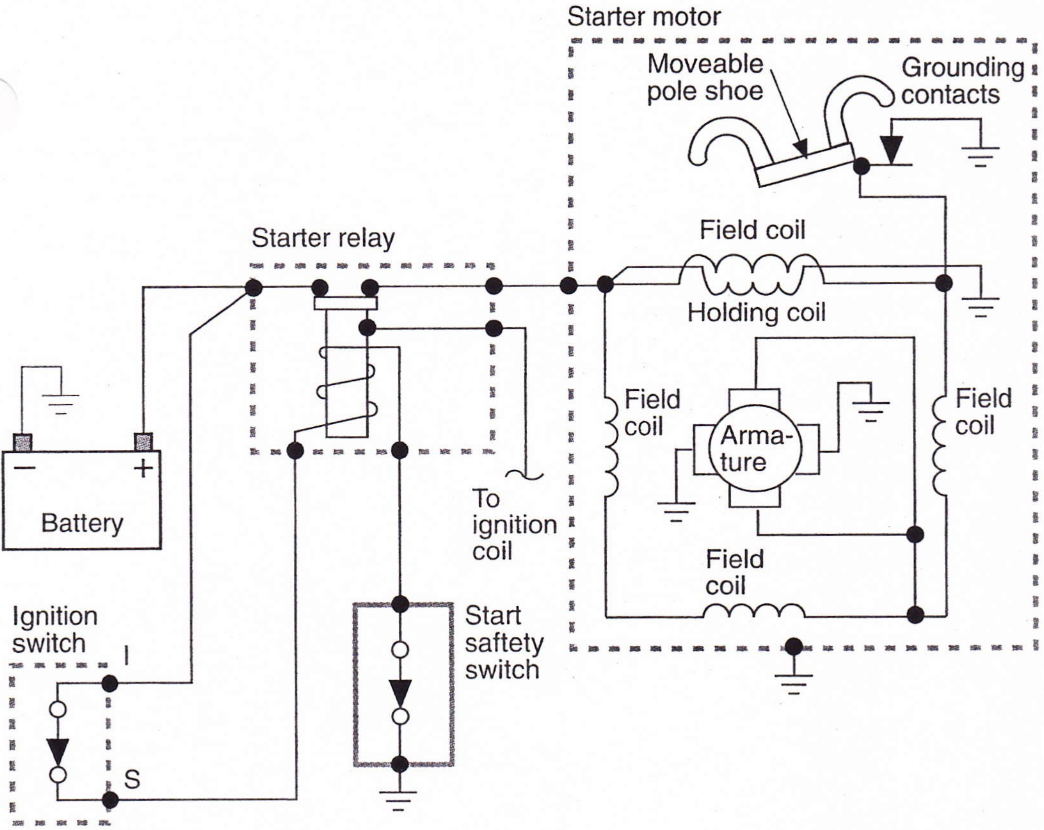

FIGURE 17–8 Schematic of a positive-engagement starter.

The **field coils** and their **pole shoes** (Figure 17–9) are securely attached to the inside of the iron housing (Figure 17–10). The field coils are insulated from the housing but are connected to a terminal that protrudes through the outer surface of the housing.

The field coils and pole shoes are designed to produce strong stationary electromagnetic fields within the starter body as current is passed through the starter. These magnetic fields are concentrated at the pole shoe. Fields have an N or S magnetic polarity depending on the direction of current flow. The coils are wound around respective pole shoes in opposite directions to generate opposing magnetic fields.

The field coils connect in series with the armature winding through the starter **brushes**. This design permits all current passing through the field coil circuit to also pass through the armature windings.

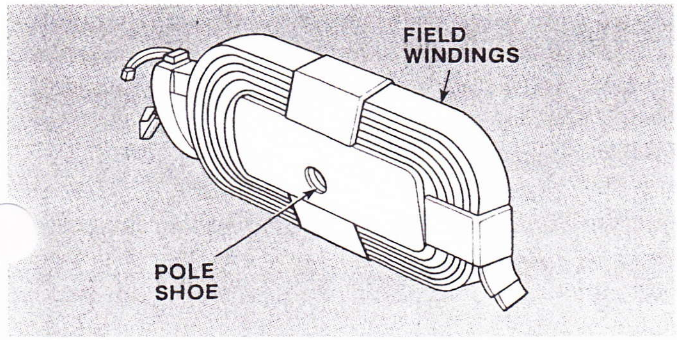

FIGURE 17–9 Example of a field coil and pole shoe.

The **armature** is the only rotating component of the starter. It is located between the drive and commutator end frames and the field windings. When the starter operates, the current passing through the armature produces a magnetic field in each of its conductors. The reaction between the armature's magnetic field and the magnetic fields produced by the field coils causes the armature to rotate. This is the mechanical energy that is then used to crank the engine.

The armature has two main components: the armature windings and the **commutator**. Both mount

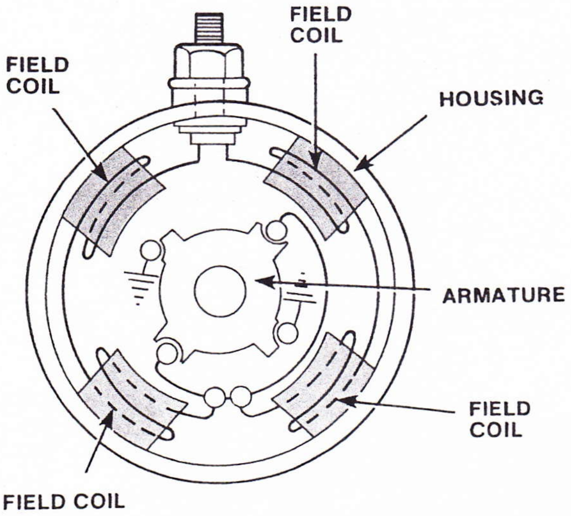

FIGURE 17–10 Cross-sectional view of a motor housing with field coils mounted to the inner housing walls.

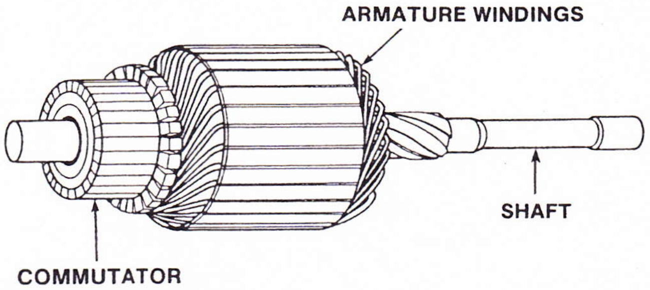

FIGURE 17–11 The armature's two main components, the commutator and the armature windings, are mounted to the armature shaft.

to the armature shaft (Figure 17–11). The armature windings are not made of wire. Instead, heavy flat copper strips are used that can handle the heavy current flow. The windings are made of several coils of a single loop each. The sides of these loops fit into slots in the armature core or shaft, but they are insulated from it.

The coils connect to each other and to the commutator so current from the field coils flows through all of the armature windings at the same time. This action generates a magnetic field around each armature winding, resulting in a repulsion force all around the conductor. This repulsion force causes the armature to turn.

The commutator assembly presses onto the armature shaft. It is made up of heavy copper segments separated from each other and the armature shaft by insulation. The commutator segments connect to the ends of the armature windings.

Most starter motors have two to six brushes that ride on the commutator segments and carry the heavy current flow from the stationary field coils to the rotating armature windings via the commutator segments.

The brushes mount on and operate in some type of holder, which may be a pivoting arm design inside the starter housing or frame (Figure 17–12). However, in many starters the brush holders are secured to the commutator end frame. In both cases, the brush holder supports the brushes in position. Springs hold the brushes against the commutator with the correct pressure. Finally, alternate brush holders are insulated from the housing or end frame. Those in between the insulated holders are grounded.

The commutator end frame consists of a metal plate that bolts to the commutator end of the starter housing. It supports the commutator end of the armature with a bushing and often contains the brush holders that support the brushes.

Operating Principle The starter motor converts electric current into torque or twisting force through the interaction of magnetic fields. It has a stationary magnetic field, the field windings, and a current-carrying conductor, the armature windings (Figure 17–13). When the armature windings are placed in this stationary magnetic field and current is passed through the windings, a second magnetic field is generated with its lines of force wrapping around the wire (Figure 17–14). Since the lines of force in the stationary magnetic field flow in one direction across the winding, they combine on one side of the wire increasing the field strength but are opposed on the other side, weakening the field strength. This creates an unbalanced magnetic force, pushing the wire in the direction of the weaker field (Figure 17–15).

Since the armature windings are formed in loops or coils, current flows outward in one direction and returns in the opposite direction. Because of this, the magnetic lines of force are oriented in opposite directions in each of the two segments of the loop. When placed in the stationary magnetic field of the field coils, one part of the armature coil is pushed in one

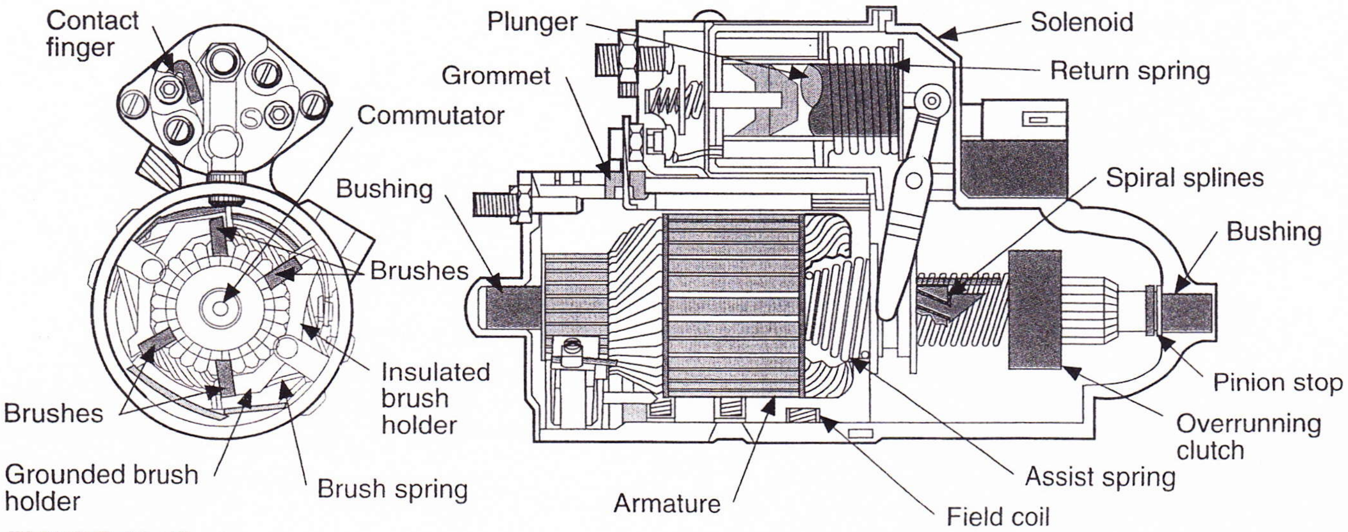

FIGURE 17–12 Location of the starter motor brushes and commutator. *Courtesy of General Motors Corporation*

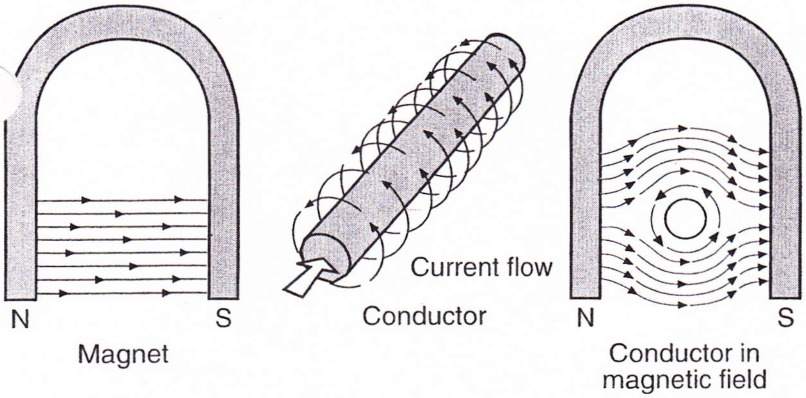

FIGURE 17–13 Magnetic field interaction for induction.

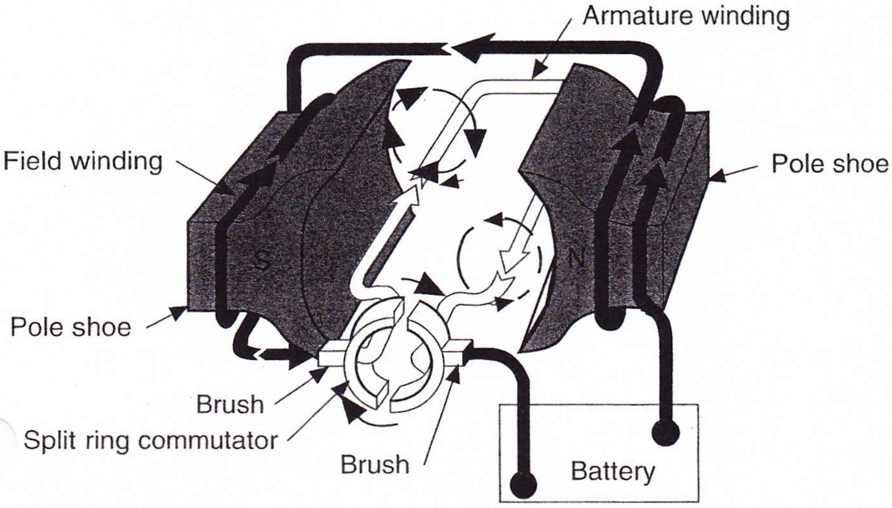

FIGURE 17–14 Simple DC motor.

direction. The other part is pushed in the opposite direction. This causes the coil and the shaft to which it is mounted to rotate.

Each end of the armature windings is connected to one segment of the commutator (Figure 17–16). Carbon brushes are connected to one terminal of the power supply. The brushes contact the commutator segments conducting current to and from the armature coils.

As the armature coil turns through a half revolution, the contact of the brushes on the commutator causes the current flow to reverse in the coil. The commutator segment attached to each coil end has traveled past one brush and is now in contact with the other. In this way, current flow is maintained constantly in one direction, while allowing the segment of the rotating armature coils to reverse polarity as they rotate.

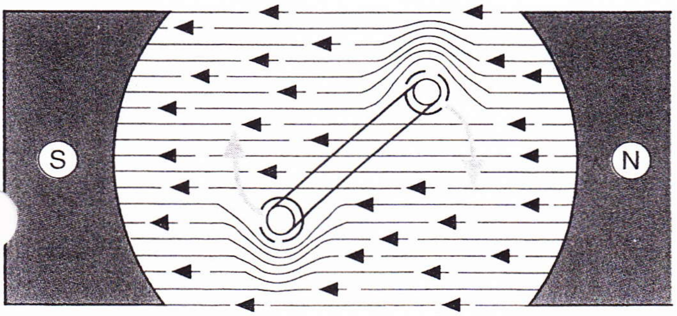

FIGURE 17–15 Rotation of the conductor is in the direction of the weaker magnetic field.

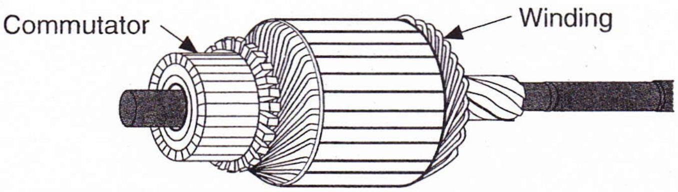

FIGURE 17–16 Armature of a starter.

In a starter motor, many armature segments must be used. As one segment rotates past the secondary magnetic field pole, another segment immediately takes its place. The turning motion is made uniform and the torque needed to turn the flywheel is constant rather than fluctuating as it would be if only a few armature coils were used.

The number of coils and brushes may differ between starter motor models. The armature may be wired in series with the field coils (**series motor**); the

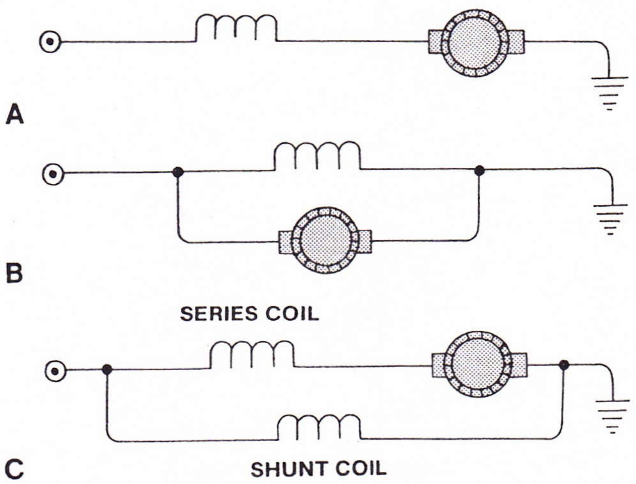

FIGURE 17–17 Starter motors are grouped according to how they are wired: (A) in series, (B) in parallel (shunt), or (c) a compound motor using both series and shunt coils.

field coils may be wired parallel or shunted across the armature (**shunt motors**); or a combination of series and shunt wiring may be used (**compound motors**) (Figure 17–17).

The amount of turning torque from a starter motor depends on a number of factors. One of the most important factors is current draw. The more current a starter draws, the more torque it is able to apply. Also, the slower the motor turns, the more current it will draw. This is why a starter motor will draw excessive amounts of current when the engine is very difficult to turn over or crank. A motor needs more torque to crank a difficult-to-turn engine. The relationship between current draw and motor speed is explained by the principles of **counter EMF (CEMF)**.

When the armature rotates within the field windings of a motor, conditions exist to induce a voltage in the armature. Voltage is induced any time a wire is passed through a magnetic field. When the armature, which is a structure with many loops of wire, rotates past the field windings, a small amount of voltage is induced. This voltage opposes the voltage supplied by the battery to energize the armature. As a result, less current is able to flow through the armature.

The faster the armature spins, the more induced voltage is present in the armature. The more voltage in the armature, the more opposition there is to normal current flow to the armature. The induced voltage in the armature opposes or is counter to the battery's voltage. This is why the induced voltage is called CEMF.

The effects of CEMF are quite predictable. When the armature of the motor turns slowly, low amounts of voltage are induced and, therefore, low amounts of CEMF are present. The low amount of CEMF allows a high amount of current draw. In fact, the only time a starter motor draws its maximum amount of current is when the armature is not rotating.

A series-wound motor develops its maximum torque at start-up and develops less torque as speed increases. It is ideal for application involving heavy starting loads.

Shunt or parallel-wound motors develop considerably less start-up torque but maintain a constant speed at all operating loads. Compound motors combine the characteristics of good starting torque with constant speed. The compound design is particularly useful for applications in which heavy loads are suddenly applied. In a starter motor, a shunt coil is frequently used to limit the maximum free speed at which the starter can operate.

Drive Mechanisms

The area in which starters differ most is in their drive mechanisms used to crank the engine. The solenoid-actuated direct drive system has been explained earlier in this chapter.

Positive Engagement Movable Pole Shoe Drive

Positive engagement movable pole shoe drive starters (Figure 17–18) are mostly used by Ford. In this design, the drive mechanism is an integral part of the motor, and the drive pinion is engaged with the flywheel before the motor is energized.

When the ignition switch is moved to the start position, the system's starter relay closes, and full battery current is delivered to the starter. This current runs through the winding of the movable pole shoe and through a set of contacts to ground. This generates a magnetic force that pulls down the movable pole shoe. It also forces the drive pinion to engage the flywheel ring gear using a lever action and opens the contacts. A small holding coil helps keep the movable shoe and lever assembly engaged during cranking. When the engine starts, an overrunning clutch prevents the engine's flywheel from spinning the armature of the motor.

When the ignition switch is released from the start position, both the pole shoe and lever return to their original positions.

Solenoid-Actuated Gear Reduction Drive Solenoid-actuated **gear reduction-drive starters** use a solenoid to engage the pinion with the flywheel and to close the motor circuit (Figure 17–19). The starter armature does not drive the pinion directly. Instead, it drives a small gear that is permanently meshed with a larger gear having a reduction ratio of 2:1 to 3.5:1, depending on the engine size. This design allows a small, high-speed motor to develop increased turning torque at a satisfactory cranking rpm. The solenoid

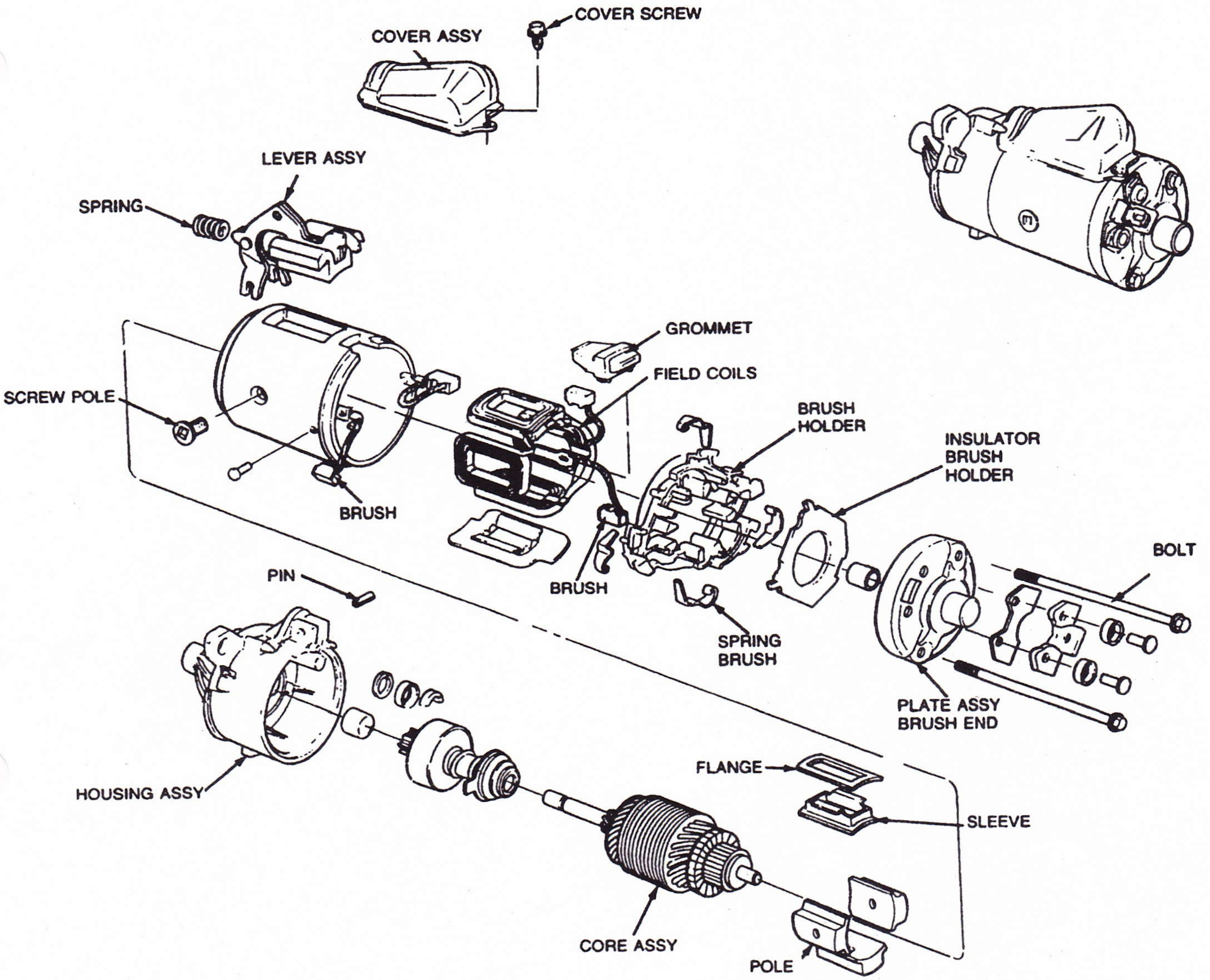

FIGURE 17–18 Typical positive engagement movable pole shoe starter. *Courtesy of Ford Motor Company*

and starter drive operation is basically the same as in solenoid-actuated direct drive systems.

While reduction starters are designed to deliver more cranking power using fewer amperes than ordinary starters, the reverse may be true if the gears wear or otherwise go bad. Increased starter noise is a sign that worn reduction gears may be a problem.

Permanent Magnet Starting Motor The most recent change in starting motors has been in the use of permanent magnets rather than electromagnets as field coils. Electrically, this starter motor is simpler. It does not require current for field coils. Current is delivered directly to the armature through the com-

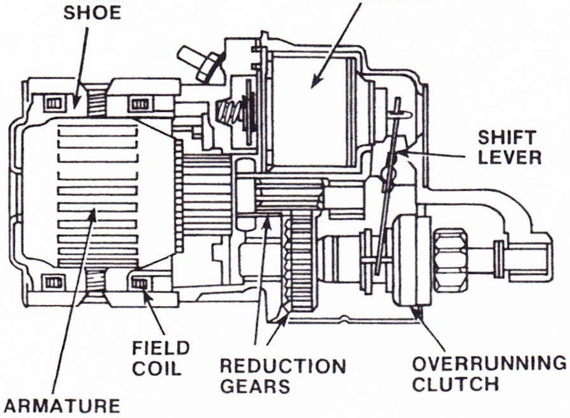

FIGURE 17–19 Typical gear reduction starter design.

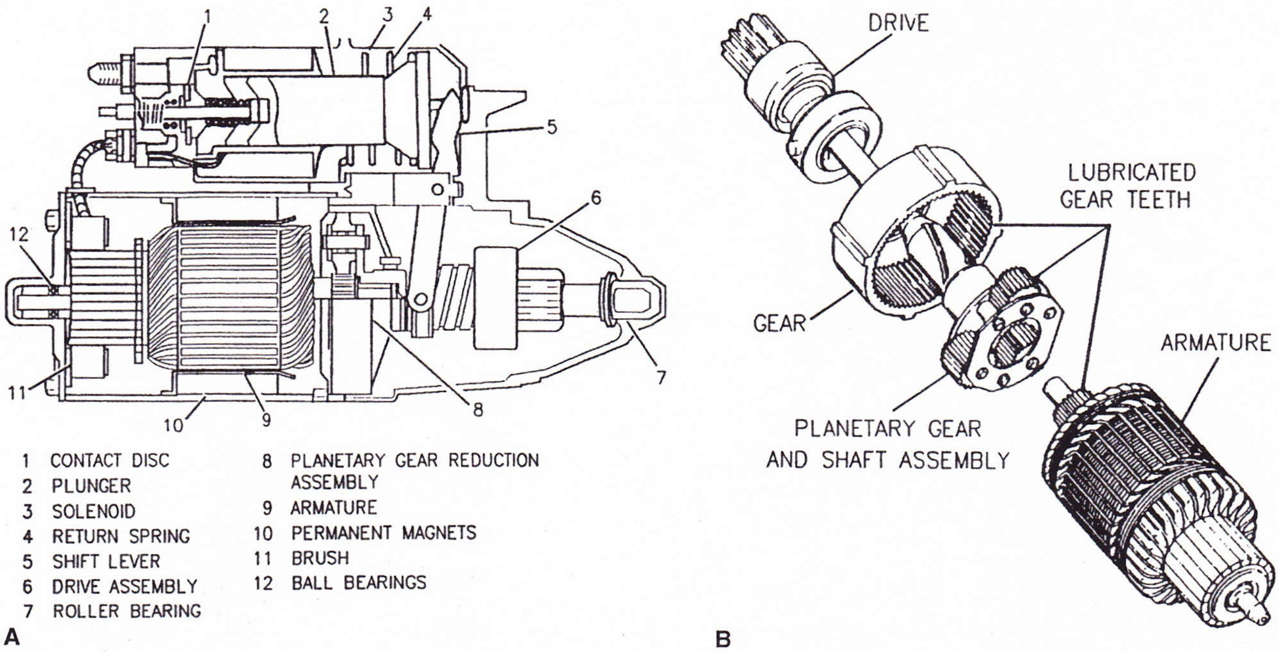

FIGURE 17–20 (A) Permanent magnet, planetary drive starter and (B) planetary gear construction details.

mutator and brushes. Figure 17–20 shows this starter motor. With the exception of no electromagnets for the fields, this unit functions exactly as the other styles considered. Increased use of this style is expected in the future as production costs are greatly reduced. Maintenance and testing procedures are the same as for other designs. Notice the use of a planetary gear reduction assembly on the front of the armature. This allows the armature to spin with increased torque, resulting in improved starter cold-cranking performance. The starter design also results in reduced size and weight. Consequently, overall vehicle weight is lighter and fuel efficiency is enhanced. Reducing the overall size while keeping the torque high improves the adaptability of the unit in certain vehicles where space is at a premium. The unit still requires the use of a starting solenoid. It should also be noted that these units require special handling since the permanent magnet material is quite brittle and can be destroyed with a sharp blow or if the starter is dropped.

STARTER DRIVE

A **starter drive** includes a pinion gear set that meshes with the flywheel on the engine's crankshaft (Figure 17–21). To prevent damage to the pinion gear or the flywheel's ring gear, the pinion gear must mesh with the ring gear before the starter motor rotates. To help ensure smooth engagement, the end of the pinion gear is tapered (Figure 17–22). Also, the movement of the armature must always be caused by the action of the motor, not the engine. For this reason, starter drive assemblies include an overrunning clutch.

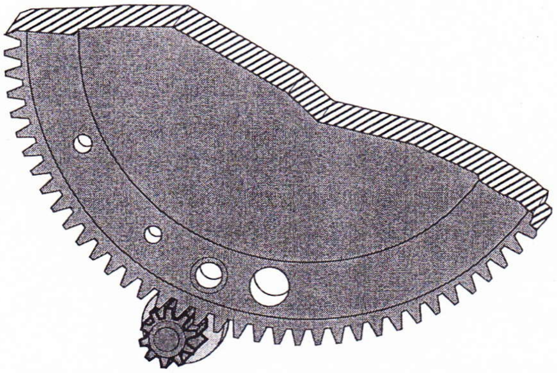

FIGURE 17–21 Starter drive pinion gear is used to turn the engine's flywheel.

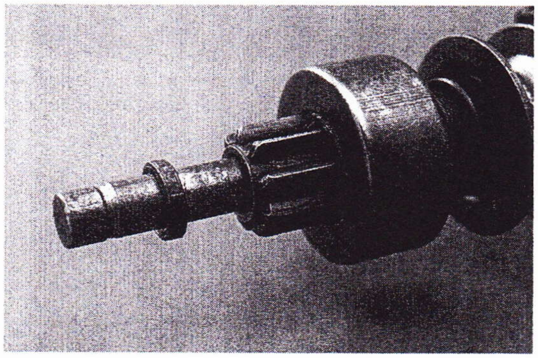

FIGURE 17–22 The pinion gear teeth are tapered to allow for smooth engagement.

Overrunning Clutch The **overrunning clutch** performs a very important job in protecting the starter

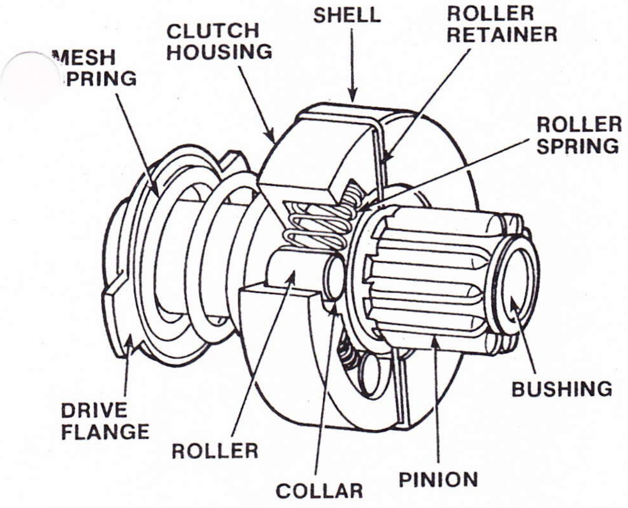

FIGURE 17–23 Sectional view of a typical overriding clutch.

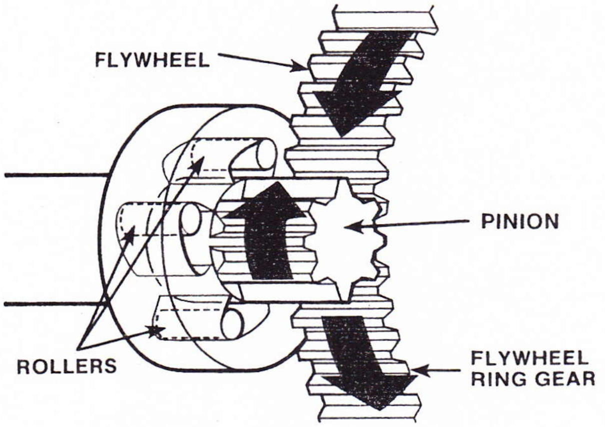

FIGURE 17–25 When the engine starts, the flywheel spins the pinion gear faster, which releases the rollers from the wedge.

motor. When the engine starts and runs, its speed increases. If the starter motor remained connected to the engine through the flywheel, the starter motor would spin at very high speeds, destroying the armature winding.

To prevent this, the starter must be disengaged from the engine as soon as the engine turns more rapidly than the starter has cranked it. However, with most starter designs the pinion remains engaged until electricity stops flowing to the starter. In these cases, an overrunning clutch is used to disengage the starter. A typical overrunning clutch is shown in Figure 17–23.

The clutch housing is internally splined to the starting motor armature shaft. The drive pinion turns freely on the armature shaft within the clutch housing. When the clutch housing is driven by the armature, the spring-loaded rollers are forced into the small ends of their tapered slots and wedged tightly against the pinion barrel (Figure 17–24). This locks the pinion and clutch housing solidly together, permitting the pinion to turn the flywheel and, thus, crank the engine.

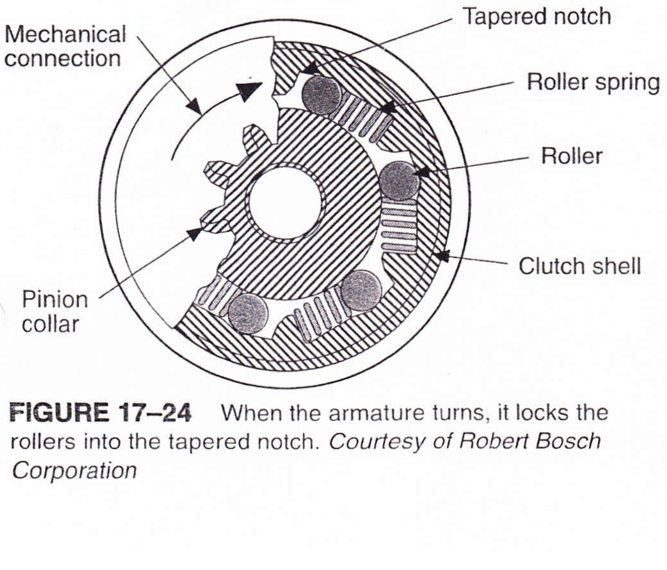

FIGURE 17–24 When the armature turns, it locks the rollers into the tapered notch. *Courtesy of Robert Bosch Corporation*

When the engine starts (Figure 17–25) the flywheel spins the pinion faster than the armature. This releases the rollers, unlocking the pinion gear from the armature shaft. The pinion then overruns the armature shaft freely until being pulled out of the mesh without stressing the starter motor. Note that the overrunning clutch is moved in and out of mesh by the starter drive linkage.

CONTROL CIRCUIT

The control circuit allows the driver to use a small amount of battery current to control the flow of a large amount of current in the starting circuit.

The entire circuit usually consists of an ignition switch connected through normal gauge wire to the battery and the magnetic switch (solenoid or relay). When the ignition switch is turned to the start position, a small amount of current flows through the coil of the magnetic switch, closing it and allowing full current to flow directly to the starter motor. The ignition switch performs other jobs besides controlling the starting circuit. It normally has at least four separate positions: accessory, off, on (run), and start.

Starting Safety Switch

The **starting safety switch**, often called the **neutral safety switch**, is a normally open switch that prevents the starting system from operating when the transmission is in gear. This eliminates the possibility of a situation that could make the vehicle lurch unexpectedly forward or backward. Safety switches are more commonly used with automatic transmissions but are also used on manual transmissions.

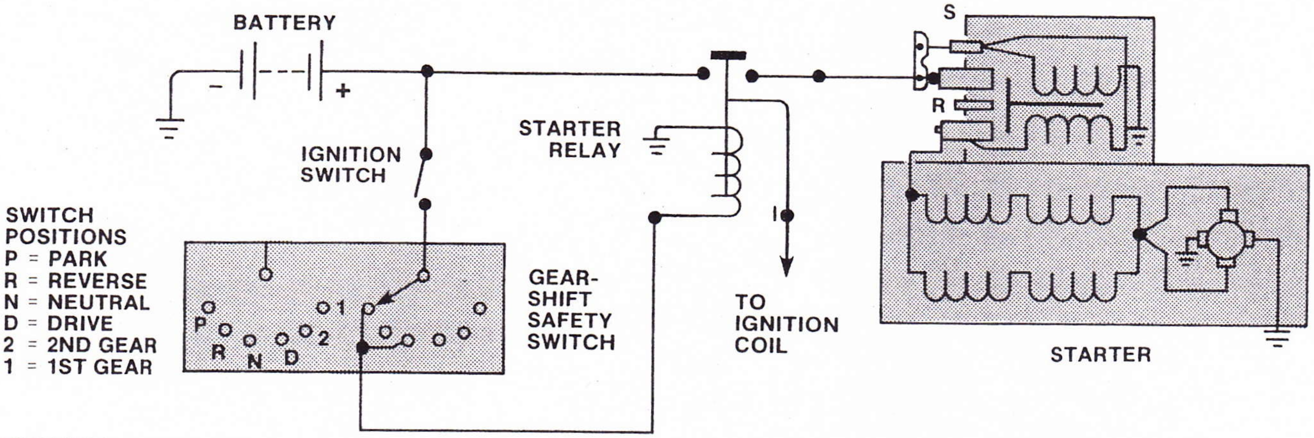

FIGURE 17–26 This starter safety switch must be closed before battery current can reach the starter relay.

Starting safety switches can be located in either of two places within the control circuit. One location is between the ignition switch and the relay or solenoid. In this position, the safety switch must be closed before current can flow to the relay or solenoid. A second location for the safety switch is between the relay and ground. The switch must be closed before current can flow from the relay to ground.

The safety switch used with an automatic transmission can be either an electrical switch or a mechanical device. Contact points on the electrical switch are closed only when the shift selector is in park or neutral (Figure 17–26). The switch can be mounted near the shift selector (Figure 17–27) or on the transmission housing. The switch contacts are wired in series with the control circuit so that no current can flow through the relay or solenoid unless the transmission is in neutral or park.

Mechanical safety switches for automatic transmissions are simply devices that physically block the movement of the ignition key when the transmission is in a gear (Figure 17–28). The ignition key can only be turned when the shift selector is in park or neutral.

The safety switches used with manual transmissions are usually electrical switches mounted near the gear-shift lever or on the transmission housing. A clutch switch is a second type of safety switch used with manual transmissions. This electrical switch mounts on the floor or fire wall. Its contacts are closed only when the clutch pedal is fully depressed (Figure 17–29).

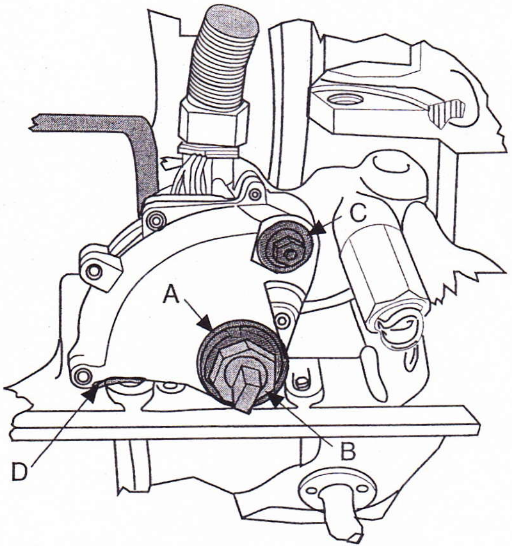

A-Locking washer
B-Switch attaching nut
C-Switch adjusting bolt
D-Neutral safety switch

FIGURE 17–27 Neutral safety switch attached to the shift lever on the console.

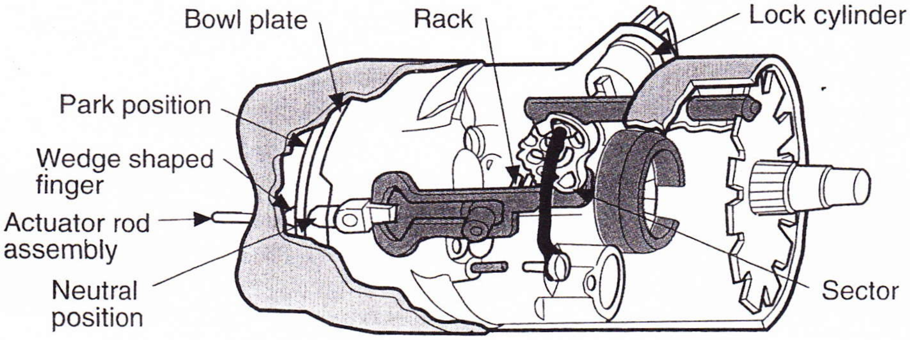

FIGURE 17–28 Mechanical linkage used to prevent starting the engine while the transmission is in gear. *Courtesy of Cadillac Motor Car Division, General Motors Corporation*

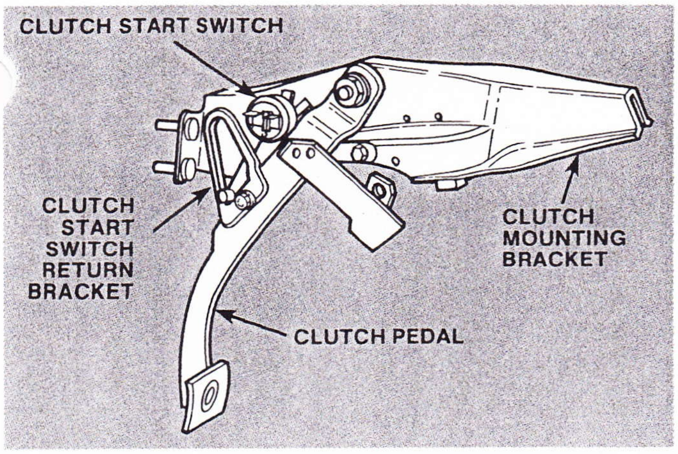

FIGURE 17–29 The clutch pedal must be fully depressed to close the clutch switch and complete the control circuit.

STARTING SYSTEM TESTING

As mentioned earlier, the starter motor is a special type of electrical motor designed for intermittent use only. During testing, it should never be operated for more than 30 seconds without resting for 2 minutes in between operation cycles to allow it to cool.

Preliminary Checks

The cranking output obtained from the motor is also affected by the condition and charge of the battery, the circuit's wiring, and the engine's cranking requirement.

The battery should be checked and charged as needed before testing. Be sure the battery is rated to meet or exceed the vehicle manufacturer's recommendations. The voltage rating of the battery must also match the voltage rating of the starter motor.

Check the wiring for clean, tight connections. The starter motor may draw several hundred amperes or more during cranking. Loose or dirty connections will cause excessive voltage drop. Cables should also be checked for correct gauge size. These cables should also be inspected to see if they are too long. Excessive length causes excessive resistance.

Make certain the engine is filled with proper weight oil as recommended by the vehicle manufacturer. Heavier-than-specified oil when coupled with low operating temperatures can drastically lower cranking speed to the point where the engine does not start and excessively high current is drawn by the starter.

Check the ignition switch for loose mounting, damaged wiring, sticking contacts, and loose connections. Check the wiring and mounting of the safety switch, if so equipped, and make certain the switch is properly adjusted. Check the mounting, wiring, and connections of the magnetic switch and starter motor. Also, be sure the starter pinion is properly adjusted.

Safety Precautions

Almost all starting system tests must be performed while the starter motor is cranking the engine. However, the engine must not start and run during the test or the readings will be inaccurate.

To prevent the engine from starting, the ignition switch can be bypassed with a remote starter switch that allows current to flow to the starting system but not to the ignition system. On vehicles with the ignition starting by-pass in the ignition switch or the starter relay, the ignition must be disabled.

On standard ignition systems, disable the ignition by removing the secondary lead from the center of the distributor cap and grounding the lead. With electronic systems or engine control systems, disconnect the wiring harness connector from the distributor.

During testing, be sure the transmission is out of gear during cranking and the parking brake is set. When servicing the battery, always follow safety precautions. Always disconnect the battery ground cable before making or breaking connections at the system's relay, solenoid, or starter motor.

Troubleshooting Procedures

A systematic troubleshooting procedure is essential when servicing the starting system. Consider the fact that nearly 80 percent of defective starters returned on warranty claims work perfectly when tested. This is often the result of poor or incomplete diagnosis of the starting and related charging systems. A summary of a systematic approach to starting system diagnosis is found in the *Tech Manual* that accompanies this textbook. Testing the starting system can be divided into area tests, which check voltage and current in the entire system, and more detailed pinpoint tests, which target one particular component or segment of the wiring circuit.

Battery Load Test (Area Test)

An engine that turns sluggishly when cranked is often not receiving sufficient voltage from the battery. The battery must be able to crank the engine under all load conditions while maintaining enough voltage to supply ignition current for starting. Perform a battery load test before performing any starting systems tests.

Cranking Voltage Test (Area Test)

The **cranking voltage test** measures the available voltage to the starter during cranking. To perform the test, disable the ignition or use a remote starter switch to bypass the ignition switch. Normally, the remote starter switch is connected to the positive side of the battery and the starter terminal of the solenoid or relay (Figure 17–30). Refer to the service manual for specif-

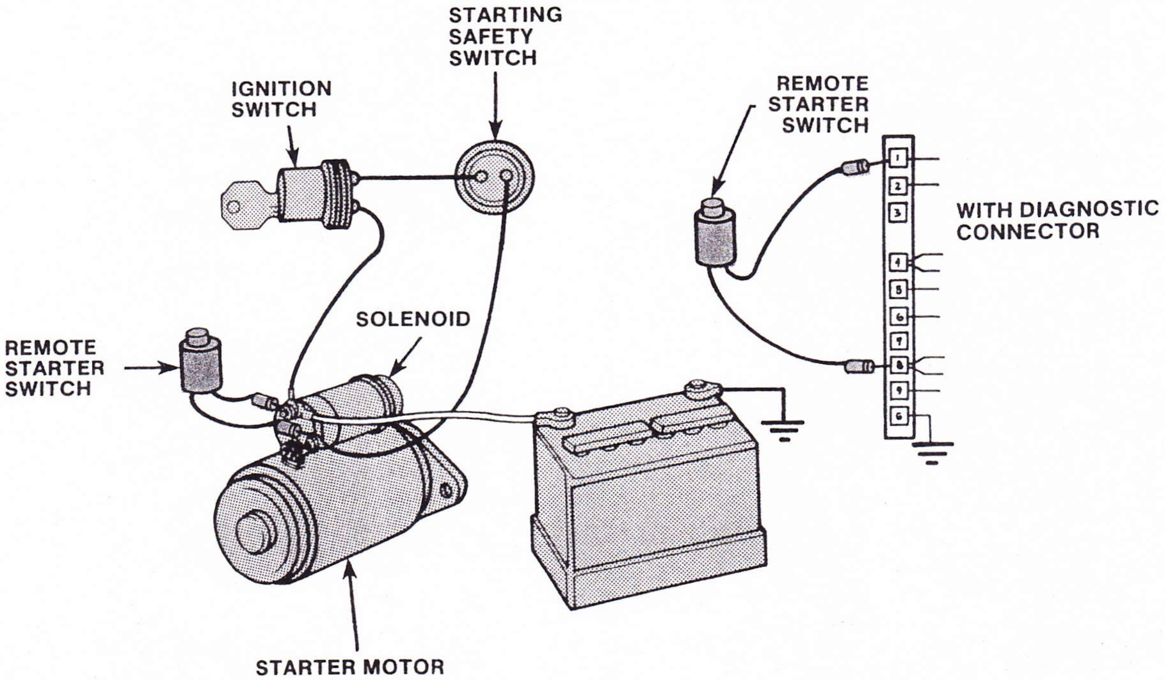

FIGURE 17–30 Using a remote starter switch to bypass the control circuit and ignition system.

ic instructions on the model car being tested. Connect the voltmeter's negative lead to a good chassis ground. Connect the positive lead to starter motor feed at the starter relay or solenoid. Activate the starter motor and observe the voltage reading. Compare the reading to the specifications given in the service manual. Normally, 9.6 volts is the minimum required.

Test Conclusions If the reading is above specifications but the starter motor still cranks poorly, the starter motor is faulty. If the voltage reading is lower than specifications, a cranking current test and circuit resistance test should be performed to determine if the problem is caused by high resistance in the starter circuit or an engine problem.

Cranking Current Test (Area Test)

The **cranking current test** measures the amount of current the starter circuit draws to crank the engine. Knowing the amount of current draw helps to identify the cause of starter system problems. Photo Sequence 9 outlines the procedure for conducting this test.

Nearly all starter current testers use an inductive pick-up (Figure 17–31) to measure the current draw. However, some earlier models were equipped with an ammeter that needed to be connected in series with the battery.

To conduct the cranking current test, disable the ignition prior to testing (Figure 17–32, page 424). Follow the instructions given with the tester when connecting the test leads. Crank the engine for no more than 15 seconds. Observe the voltmeter. If the voltage drops below 9.6 volts, a problem is indicated. Also, watch the ammeter and compare the reading to specifications.

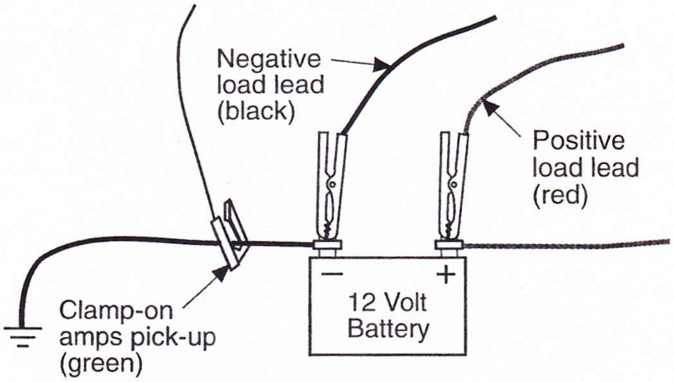

FIGURE 17–31 Connecting the test leads of a typical CSB tester. *Courtesy of Sun Electric Corporation*

Test Conclusions Normally, the expected current draw is approximately equal to the cubic inch displacement of the engine. Table 17–1 (page 424) summarizes the most probable causes of too low or high starter motor current draw. If the problem appears to be caused by excessive resistance in the system, conduct an insulated circuit resistance test.

Insulated Circuit Resistance Test

The complete starter circuit is made up of the insulated circuit and the bare ground circuit. The insulated circuit includes all of the high current cables and connections from the battery to the starter motor.

To test the insulated circuit for high resistance, disable the ignition or bypass the ignition switch with

PHOTO SEQUENCE 9

USING A VOLT AND AMP TESTER TO TEST THE BATTERY AND THE STARTING SYSTEM

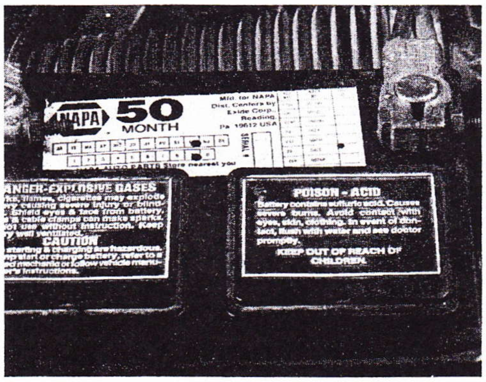

P9–1 Testing the battery and starting system begins with a visual inspection of the battery and its cables. Make sure they are clean and free of corrosion.

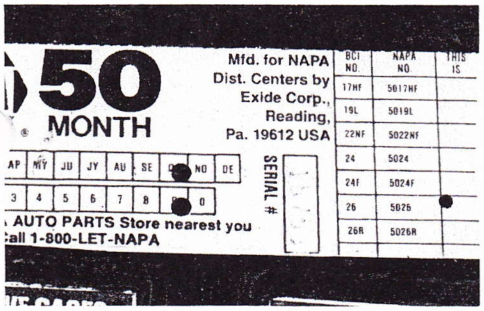

P9–2 The battery's label normally contains all of the information needed to test it. The part number can be used to determine the CCA rating of the battery.

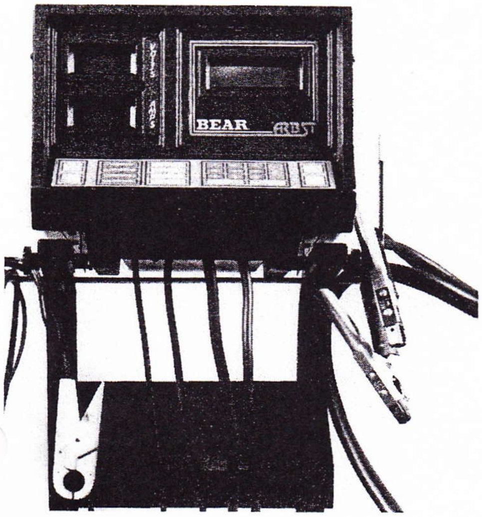

P9–3 A typical battery and starting and charging system tester.

P9–4 Testing begins with connecting the positive and negative tester leads to the battery.

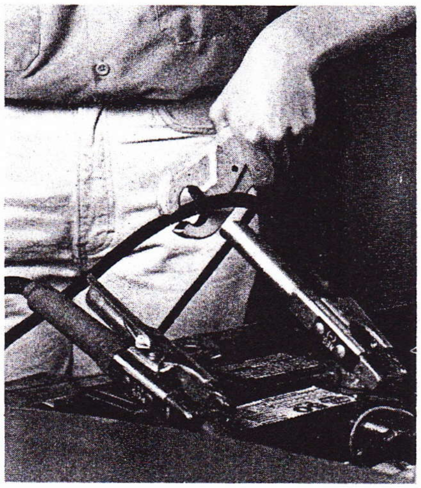

P9–5 When testing the battery, the tester's ampere pick-up probe must be installed around the tester's negative cable. If the inductive clamp is directional, point the arrow away from the battery.

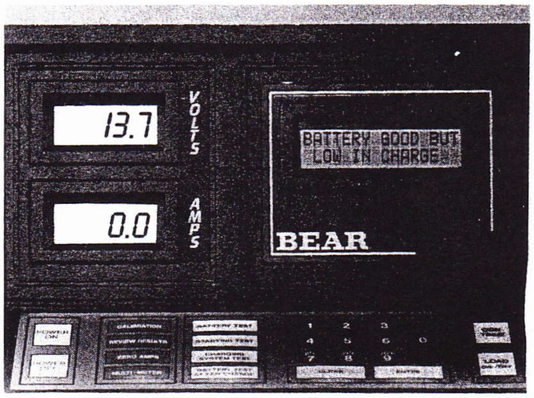

P9–6 The first test will measure the battery's capacity. For this test (known as the battery load test) the voltage is observed during and after the load test.

P9–7 The tester puts a load or causes a current drain on the battery. The amount of load is determined by the battery's CCA rating. Some machines require the technician to manually set the load to an amount that draws one-half of the CCA rating. This tester automatically sets the load after the CCA is programmed into the tester and the load activation button is depressed.

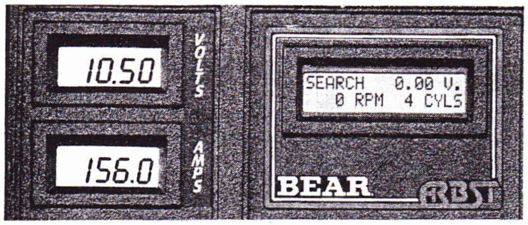

P9–8 This battery checked out fine. Its voltage decreased to an amount above 9.6 volts while under a load of 156 amperes for 15 seconds.

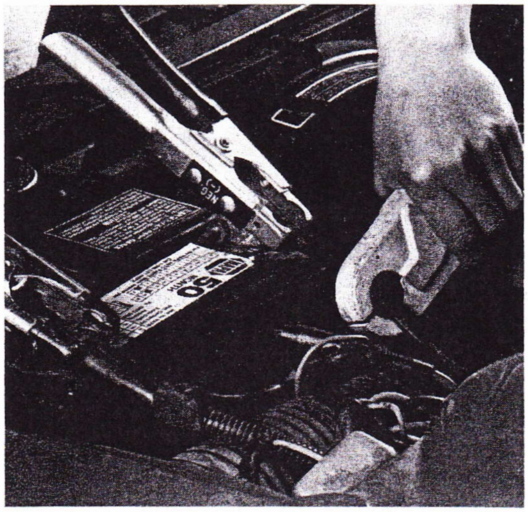

P9–9 To test the starting system, the ampere pick-up probe must be repositioned around the battery's negative cable. Make sure the arrow on the clamp is pointing away from the battery.

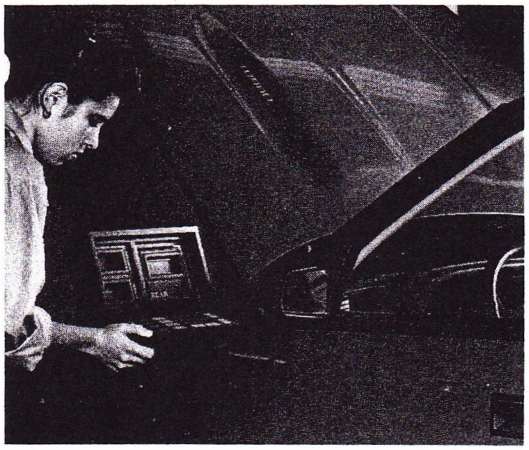

P9–10 To observe the tester's meters during this test, the tester should be placed where it can be seen easily from the driver's seat.

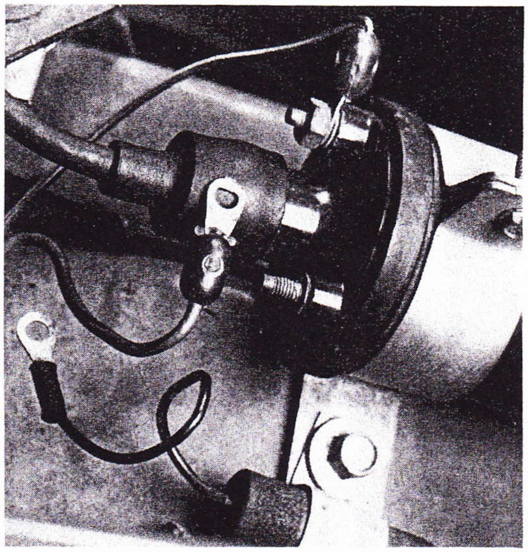

P9–11 Prior to testing the starting system, disable the ignition system.

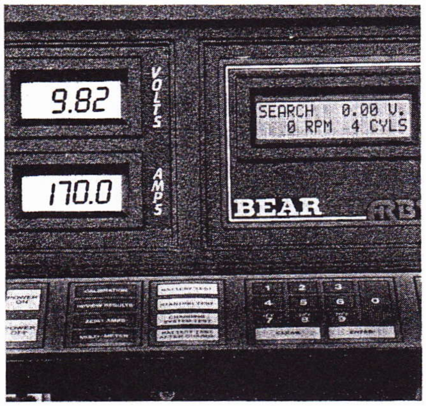

P9–12 Turn the ignition key to allow the starter to rotate. Observe the readings on the tester. This starter drew 170 amperes and dropped voltage to 9.82 volts. These readings should be compared to the specifications given in the service manual

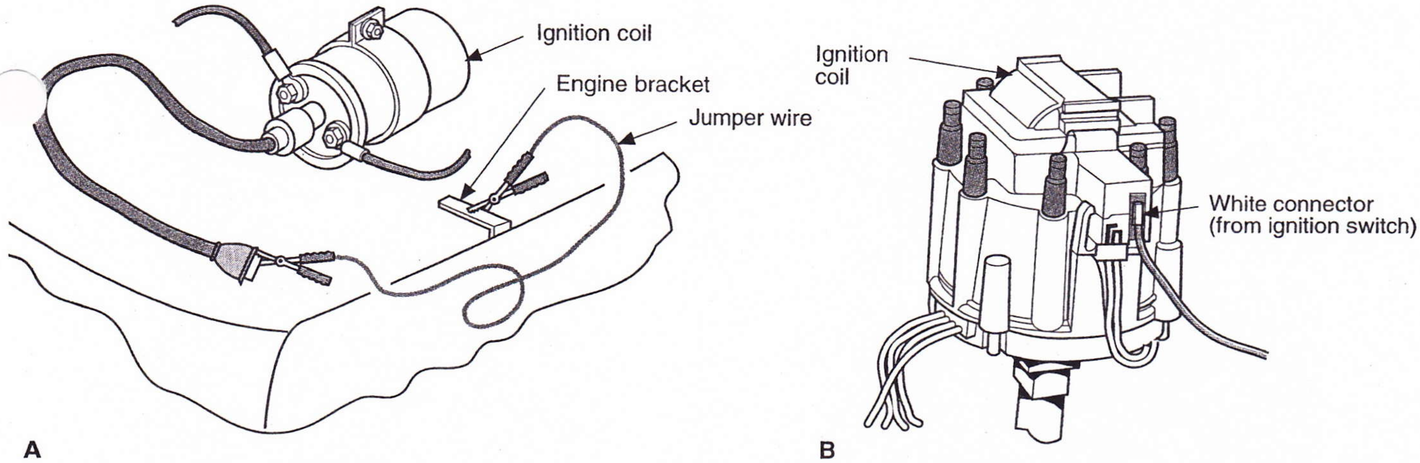

FIGURE 17–32 (A) Grounding the secondary coil wire to disable the ignition. (B) To disable an HEI ignition system, disconnect the BAT wire from the coil connector.

TABLE 17–1 RESULT OF CRANKING CURRENT TESTING

Problem	Possible Cause
Low current draw	Undercharged or defective battery. Excessive resistance in circuit due to faulty components or connections.
High current draw	Short in starter motor. Mechanical resistance due to binding engine or starter system component failure or misalignment.

a remote starter switch. Connect the positive (+) lead of the voltmeter to the battery's positive (+) terminal post or nut. By connecting the lead to the cable, the point of high resistance (cable-to-post connection) may be bypassed. Connect the negative (–) lead to the voltmeter to the starter terminal at the solenoid or relay (Figure 17–33). Crank the engine and record the voltmeter reading. If the reading is within specifications (usually 0.2 to 0.6 voltage drop), the insulated circuit does not have excessive resistance. Proceed to the ground circuit resistance test outlined in the next section. If the reading indicates a voltage loss above specifications, move the negative lead of the tester progressively toward the battery, cranking the engine at each test point. Normally, a voltage drop of 0.1 volt is the maximum allowed across a length of cable.

Test Conclusions When an excessive amount of voltage drop is observed, the trouble is located between that point and the preceding point tested. It is either a damaged cable or poor connection, an undersized wire, or possibly a bad contact assembly within the solenoid. Repair or replace any damaged wiring or faulty connections. Refer to Table 17–2 to find the maximum allowable voltage drops for the starter circuit.

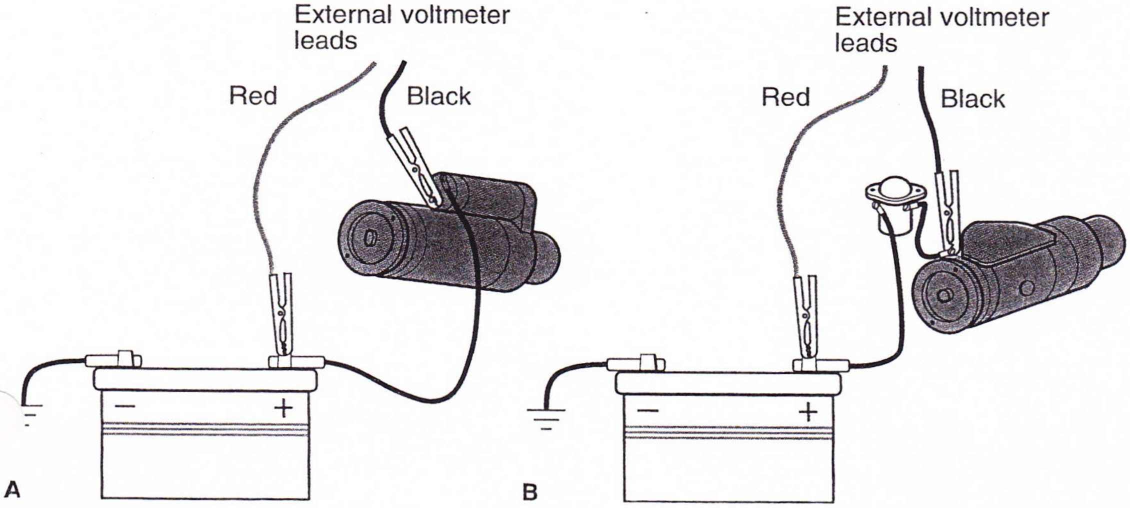

FIGURE 17–33 (A) Test lead connections for starter-mounted solenoids. (B) Test lead connections for relay controlled systems. *Courtesy of Sun Electric Corporation*

TABLE 17–2 MAXIMUM VOLTAGE DROPS

	6-volt	12-volt
Each cable	0.1	0.2
Each connection	0.1	0.1
Starter solenoid switch	0.3	0.3

Starter Relay By-Pass Test

The starter relay by-pass test is a simple way to determine if the relay is operational. First, disable the ignition. Connect a heavy jumper cable between the battery's positive (+) terminal and the starter relay's starter terminal. This bypasses the relay. When the connection is made, the engine should crank.

Test Conclusions If the engine cranks with the jumper installed and did not before the relay was bypassed, the starter relay is defective and should be replaced.

Ground Circuit Resistance Test

The ground circuit provides the return path to the battery for the current supplied to the starter by the insulated circuit. This circuit includes the starter-to-engine, engine-to-chassis, and chassis-to-battery ground terminal connections.

To test the ground circuit for high resistance, disable the ignition, or bypass the ignition switch with a remote starter switch. Refer to Figure 17–34 for the proper test connection. Crank the engine and record the voltmeter reading.

Test Conclusions Good results would be less than 0.2 voltage drop for a 12-volt system. Voltages in excess of these indicate the presence of a poor ground circuit connection, resulting from a loose starter motor bolt, a poor battery ground terminal post connector, or a damaged or undersized ground system wire from the battery to the engine block. Isolate the cause of excessive voltage drop in the same manner as recommended in the insulated circuit resistance test by moving the positive (+) voltmeter lead progressively back toward the battery. If the ground circuit tests out satisfactorily and a starter problem exists, move on to the control circuit test.

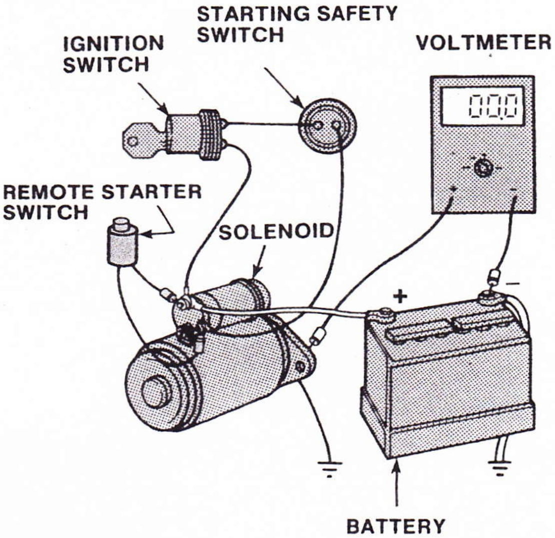

FIGURE 17–34 Setup for checking voltage drop across the ground circuit. This tests for high resistance in the circuit.

Control Circuit Test

The control circuit test examines all the wiring and components used to control the magnetic switch, whether it is a relay, a solenoid acting as a relay, or a starter motor-mounted solenoid.

High resistance in the solenoid switch circuit reduces the current flow through the solenoid windings, which can cause improper functioning of the solenoid. In some cases of high resistance, it may not function at all. Improper functioning of the solenoid switch generally results in the burning of the solenoid switch contacts, causing high resistance in the starter motor circuit.

Check the vehicle wiring diagram, if possible, to identify all control circuit components. These normally include the ignition switch, safety switch, the starter solenoid winding, or a separate relay.

To perform the test, disable the ignition system. Connect the positive meter lead to the battery's positive terminal and the negative meter lead to the starter switch terminal on the solenoid or relay. Crank the engine and record the voltmeter reading.

Test Conclusions Generally, good results would be less than 0.5 volt, indicating that the circuit condition is good. If voltage reads more than 0.5 volt, it is usually an indication of excessive resistance. However, on certain vehicles, a slightly higher voltage loss may be normal.

Identify the point of high resistance by moving the negative test lead back toward the battery's positive lead, eliminating one wire or component at a time (Figure 17–35).

A reading of more than 0.1 volt across any one wire or switch is usually an indication of trouble. If a high reading is obtained across the safety switch used on automatic transmission, check the adjustment of the switch according to the manufacturer's service manual. Clutch-operated safety switches cannot be adjusted. They must be replaced.

Test Starter Drive Components

This test detects a slipping starter drive without removing the starter from the vehicle. First, disable

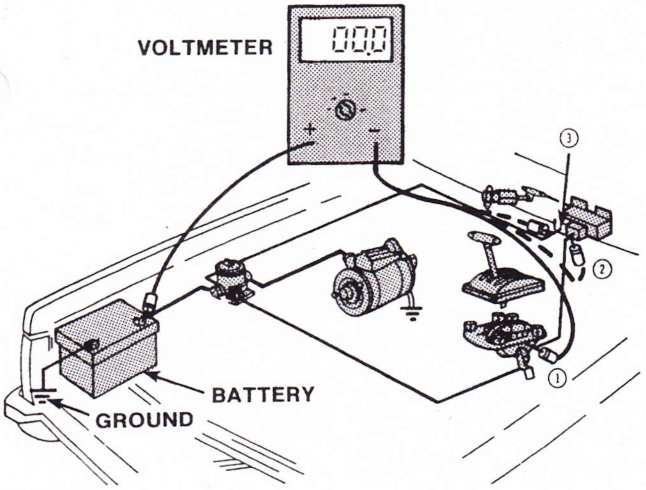

FIGURE 17–35 Typical test points to use when checking voltage drops to determine control circuit resistance.

the ignition or bypass the ignition switch with a remote starter switch. Turn the ignition switch to start and hold it in this position for several seconds. Repeat the procedure at least three times to detect an intermittent condition.

Test Conclusions If the starter cranks the engine smoothly, this is an indication of acceptable starter drive. If the engine stops cranking and the starter spins noisily at high speed, the drive is slipping and should be replaced.

If the drive is not slipping, but the engine is not being cranked, inspect the flywheel for missing or damaged teeth. Remove the starter from the vehicle and check its drive components. Inspect the pinion gear teeth for wear and damage. Test the overrunning clutch mechanism. If good, the overrunning clutch should turn freely in one direction, but not in the other. A bad clutch turns freely in the overrun direction or not at all. If a drive locks up, it can destroy the starter by allowing the starter to spin at more than 15 times engine speed.

The weak point in the movable pole starter is the pole shoe that pulls in toward the armature to engage the starter. This starter requires a minimum of 10.5 volts and about 300 to 400 amperes to operate. Otherwise, it simply clicks and does not engage.

As a movable pole starter wears, the pivot bushing sometimes hangs up and prevents the movable pole shoe from being pulled down. When this happens, the starter motor will not spin and the drive will not engage with the flywheel.

A similar problem can occur on solenoid-actuated starters. If the solenoid is too weak to overcome the force of the return springs, the starter does not operate.

CASE STUDY

A vehicle equipped with a solenoid-actuated direct-drive starting system is towed into the shop. The owner complains that the starter does not crank the engine when the ignition switch is turned to the start position.

The technician performs a battery load test to confirm that the battery is in good working order. It is. The technician then tests for voltage to the M or motor terminal on the solenoid using a voltmeter. Voltage reading at the M terminal is 12.5 volts.

Because there is voltage at the M terminal of the solenoid, inspection of individual connections and components, such as the starter safety switch, are not needed at this time. They are obviously allowing current to pass through the insulated circuit.

The technician then performs a ground circuit check to verify that the ground return path is okay. It is. Since the insulated and ground circuits have checked out okay, the only other source of an open circuit is the starter motor. The technician can now confidently pull the starter motor from the vehicle for rebuilding or replacement.

KEY TERMS

Armature
Brushes
Commutator
Compound motor
Counter EMF (CEMF)
Cranking current test
Cranking voltage test
Field coil
Gear reduction-drive starter
Hold-in winding
Neutral safety switch
Overrunning clutch
Pinion gear
Pole shoes
Positive engagement starter
Pull-in winding
Series motor
Shunt motor
Solenoid
Starter drive
Starter frame
Starter housing
Starter relay
Starting safety switch

SUMMARY

- The starting system turns the engine over until it can operate under its own power. The system has two distinct electrical circuits: the starter circuit and the control circuit.
- The starter circuit carries high current flow from the battery, through heavy cables, to the starter motor.

- The control circuit uses a small amount of current to operate a magnetic switch that opens and closes the starter circuit.
- The ignition switch is used to control current flow in the control circuit.
- Solenoids and relays are the two types of magnetic switches used in starting systems. Solenoids use electromagnetic force to pull a plunger into a coil to close the contact points. Relays use a hinged armature to open and close the circuit.
- The starter motor is an electric motor capable of producing very high horsepower for very short periods.
- The drive mechanism of the starter motor engages and turns the flywheel to crank the engine for starting.
- An override clutch protects the starter motor from spinning too fast once the vehicle engine starts.
- Starting safety switches prevent the starting system from operating when the transmission is engaged.
- All starting system wiring must have clean, tight connections.
- During starter system testing, the ignition system must be bypassed or disabled so the vehicle does not start during cranking.
- Battery load, cranking voltage, cranking current, insulated circuit resistance, starter relay by-pass, ground circuit resistance, control circuit, and drive component tests are all used to troubleshoot the starting system.

TECH MANUAL

The following procedures are included in Chapter 17 of the *Tech Manual* that accompanies this book:

1. *Remove, inspect, and replace a starter motor.*
2. *Test cranking voltage.*
3. *Test cranking current.*
4. *Test the resistance of the starting control circuit.*

REVIEW QUESTIONS

1. Why does proper starter operation depend on good battery cables and connectors?
2. Which of the following is *not* part of the starter circuit?
   - **a.** battery
   - **b.** starting safety switch
   - **c.** starter motor
   - **d.** relay solenoid
3. Which of the following could result in a hard starting condition?
   - **a.** corroded battery cables
   - **b.** excessive CCA capacity
   - **c.** heavy-gauge battery cables
   - **d.** all of the above
4. Which of the following is *not* a member of the control circuit?
   - **a.** ignition switch
   - **b.** starter relay
   - **c.** ballast resistor
   - **d.** starting safety switch
5. Which of the following tests would be performed to check for high resistance in the battery cables?
   - **a.** cranking voltage test
   - **b.** insulated circuit resistance test
   - **c.** starter relay by-pass test
   - **d.** ground circuit resistance test
6. When the starter spins but does not engage the flywheel, which of the following may be true?
   - **a.** defective starter drive
   - **b.** excessive resistance in the control circuit
   - **c.** a faulty starter relay
   - **d.** all of the above
7. The usual cranking voltage specification is approximately ____ volts.
   - **a.** 9.6
   - **b.** 10.5
   - **c.** 11.0
   - **d.** 12.65